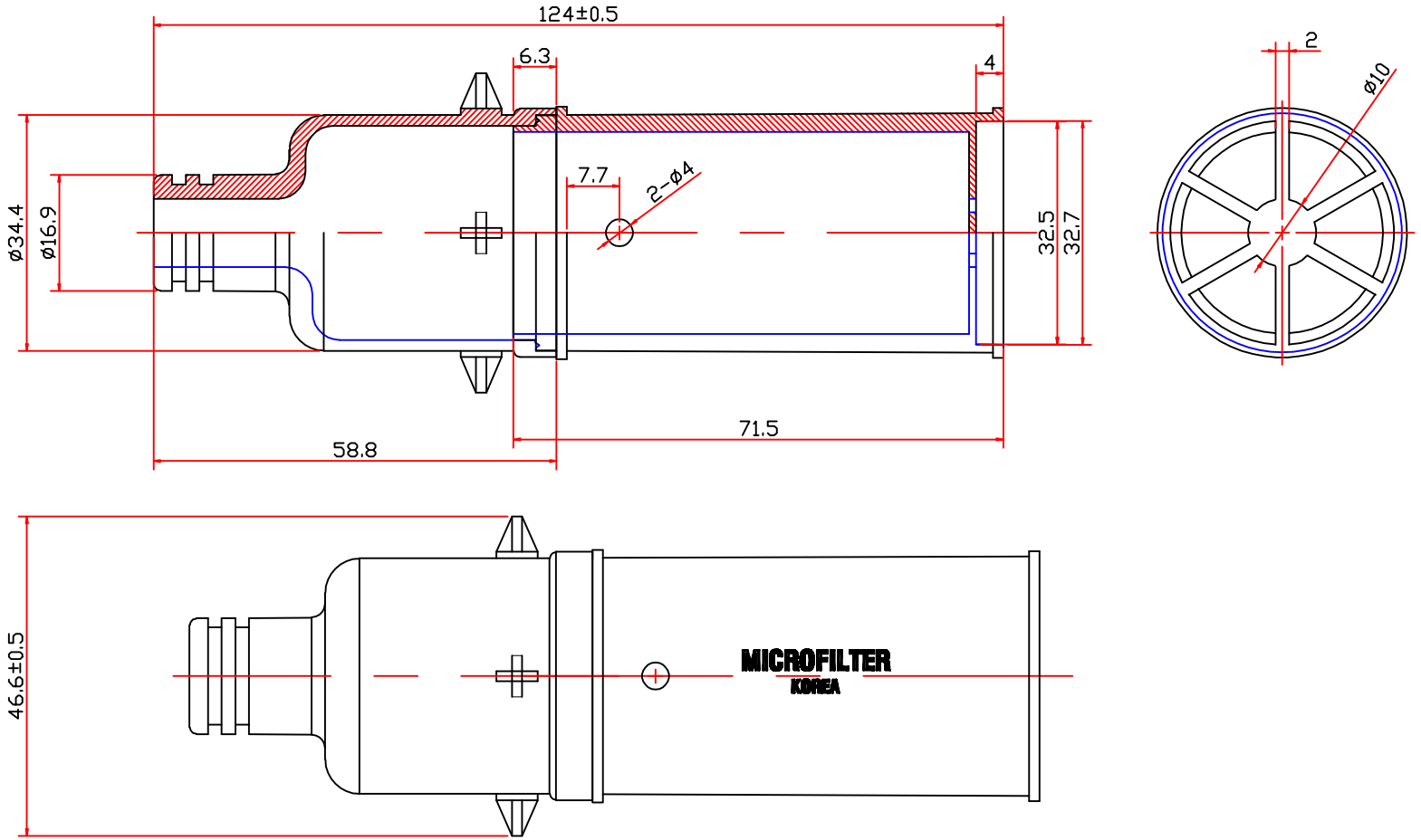

NO.	DESCRITION	MATERIAL	Q'TY	UNIT	REMARK
USER		DWG. NO.			
PROJET		PART NO.		DISINED	
TITLE	조립도	SCALE	NON	DATE	

POLYMEM CO., LTD